MADE EASY

ELECTRICAL ENGINEERING

Control System

By.Sai Kirshna Sir

- Theory
- Explanation
- Derivation
- Example
- Shortcuts
- Previous Years Question With Solution

Control System

PART-I Introduction to Control System

- Consider a liquid level control system whose control objective is to keep the water level in the tank at a prescribed height 'h'.
- Controller is an automatic device whose output is expressed as a function of error.

$$\text{Controller o/p } P(s) = f(e)$$

where, e - steady state error

- There are two basic control loop configurations :-
  (i) Closed loop or Feedback control system.
  (ii) Open loop control system.

Closed loop or Feedback control system

- In this configuration, the changes in the output are measured using feedback elements and compared with i/p or set point to achieve the control objective.
- Feedback implies measurement i.e feedback elements are measuring elements (sensors, transducers) in automatic control systems.

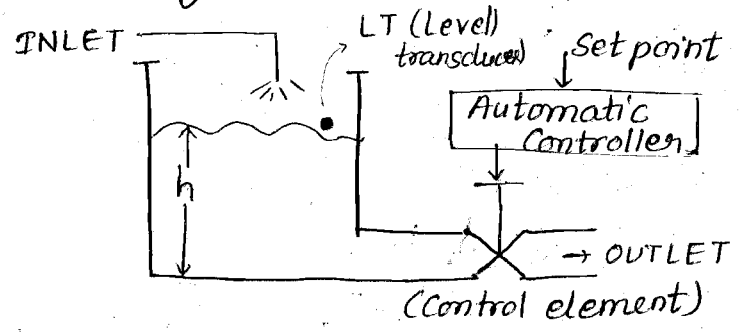

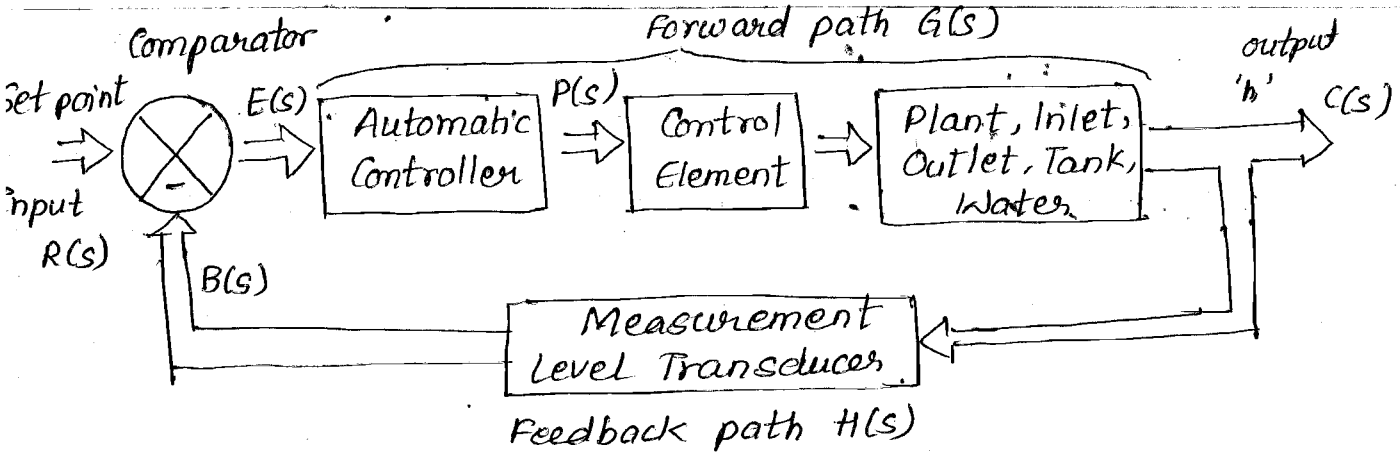

→ <u>Control Canonical form</u>

<u>Equivalent Mathematical Form</u>

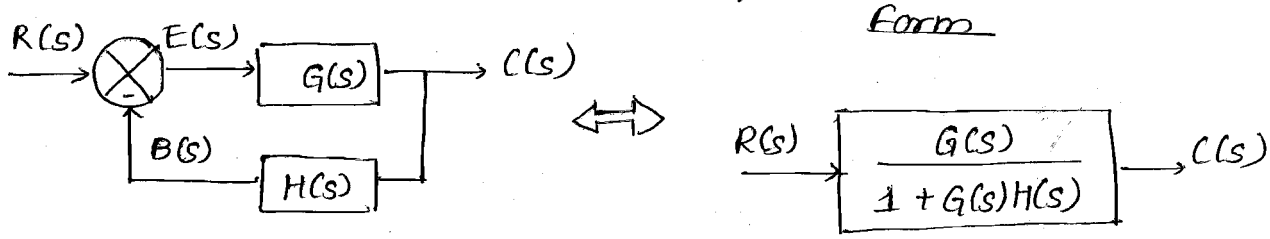

$$E(s) = R(s) - B(s)$$

$$\frac{C(s)}{G(s)} = R(s) - C(s)H(s)$$

$$C(s) = G(s)R(s) - G(s)H(s)C(s)$$

$$C(s)\left[1 + G(s)H(s)\right] = G(s)R(s) \Rightarrow C(s) = \left[\frac{G(s)}{1+G(s)H(s)}\right]R(s)$$

<u>Sensitivity analysis</u>

A control system is said to be highly sensitive if its output or control objective is affected due to disturbances.

The <u>desirable</u> feature of a good control system is, it should be <u>less sensitive</u> to <u>disturbances</u>.

<u>Sensitivity function</u>

let α = a variable that changes its value

β = a parameter that changes the value of α

change in α due to β

$$S_\beta^\alpha = \frac{\%\text{ change in } \alpha}{\%\text{ change in } \beta} = \frac{\frac{\partial \alpha}{\alpha}}{\frac{\partial \beta}{\beta}}$$

$$\boxed{S_\beta^\alpha = \frac{\beta}{\alpha}\frac{\partial \alpha}{\partial \beta}}$$

Sensitivity analysis of closed loop control system

Case 1 :- α = C.L.C.S = $M(s)$

β = disturbances in forward path elements i.e $G(s)$

$$S^{M(s)}_{G(s)} = \frac{G(s)}{M(s)} \cdot \frac{\partial M(s)}{\partial G(s)}$$

Since $M(s) = \dfrac{G(s)}{1+G(s)H(s)} \Rightarrow \dfrac{G(s)}{M(s)} = 1 + G(s)H(s)$ — ①

$$\frac{\partial M(s)}{\partial G(s)} = \frac{\partial}{\partial G(s)}\left[\frac{G(s)}{1+G(s)H(s)}\right]$$

$$= \frac{1 + \cancel{G(s)H(s)} - \cancel{G(s)H(s)}}{[1+G(s)H(s)]^2}$$

$$S^{M(s)}_{G(s)} = (1 + \cancel{G(s)H(s)}) \cdot \frac{1}{(1+G(s)H(s))^{\cancel{2}}}$$

$$\boxed{S^{M(s)}_{G(s)} = \frac{1}{1+G(s)H(s)}}$$

where, $1+G(s)H(s)$ = noise reduction factor

Case 2 :- α = C.L.C.S = $M(s)$

β = disturbances in feedbackpath elements i.e. $H(s)$

$$S^{M(s)}_{H(s)} = \frac{H(s)}{M(s)} \frac{\partial M(s)}{\partial H(s)}$$

Since, $M(s) = \dfrac{G(s)}{1+G(s)H(s)}$ $\quad \dfrac{M(s)}{H(s)} = \dfrac{G(s)}{H(s)[1+G(s)H(s)]}$

$$\cancel{\frac{M(s)}{G(s)}} = \frac{H(s)}{M(s)} = \frac{H(s)[1+G(s)H(s)]}{G(s)} \quad \text{— ①}$$

$$\frac{\partial M(s)}{\partial H(s)} = \frac{\partial}{\partial H(s)}\left[\frac{G(s)}{1+G(s)H(s)}\right]$$

$$= \frac{[1+G(s)H(s)] \times 0 - G(s).G(s)}{[1+G(s)H(s)]^2}$$

$$S^{M(s)}_{H(s)} = \frac{H(s)[1+\cancel{G(s)H(s)}]}{\cancel{G(s)}} \cdot \frac{-(G(s))^{\cancel{2}}}{[1+G(s)H(s)]^{\cancel{2}}}$$

$$\boxed{S^{M(s)}_{H(s)} = \frac{-G(s)H(s)}{1+G(s)H(s)}}$$

Note : A closed loop or f/b control system is more sensitive to disturbances in feedback elements i.e. $H(s)$ than forward path elements i.e $G(s)$.

Open Loop Control system

- They are conditional control systems formulated under the condition that the system is not subjected to any type of disturbances including input.
- In this configuration, the f/b or measurement is not connected to forward path or controller (open loop) Feedback in open loop system acts as display element, its sensitivity in this configuration is nil.
- Performance analysis is not applicable to this system bcoz they are not subjected to any disturbances and for a given input, they give out desired output.

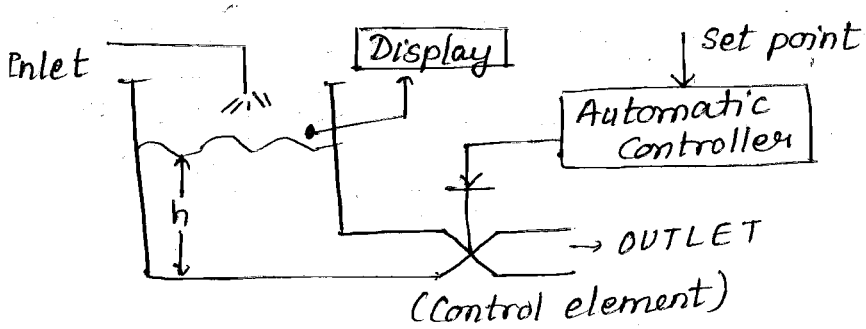

Representation of O.L.C.S

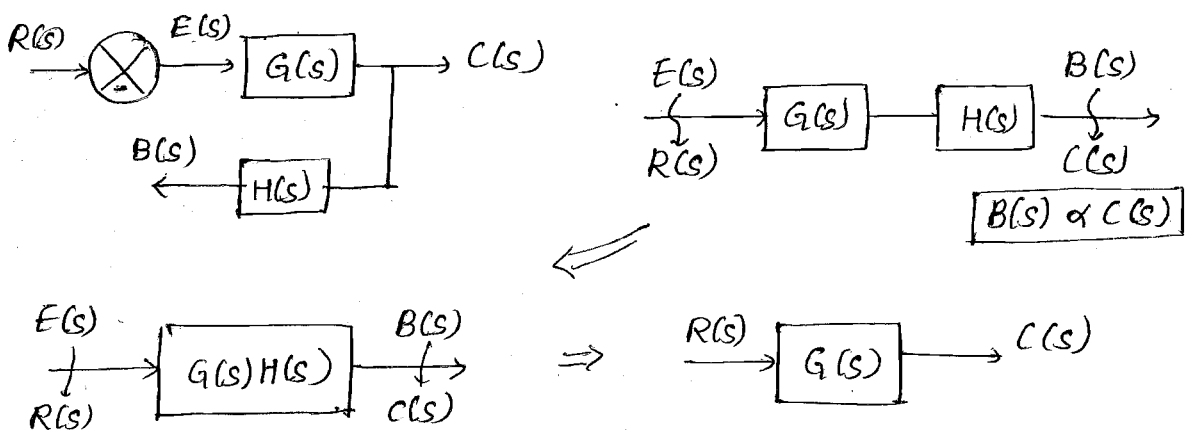

Sensitivity of O.L.C.S wrt disturbances in forward path elements i.e $G(s)$

$\alpha = O.L.C.S = M(s)$

$\beta = G(s)$

$$S^{M(s)}_{G(s)} = \frac{G(s)}{M(s)} \frac{\partial M(s)}{\partial G(s)}$$